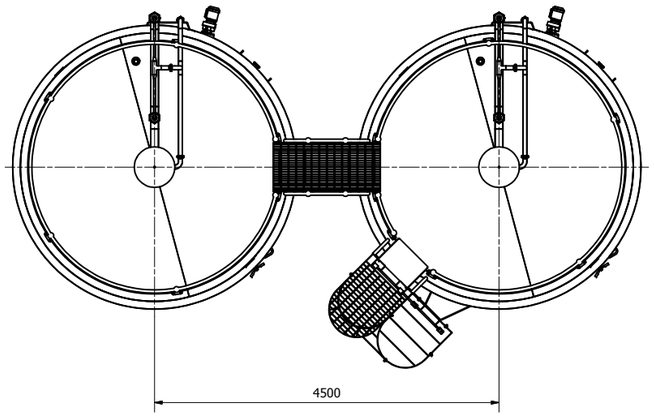

PLAN VIEW
SCALE 1:40

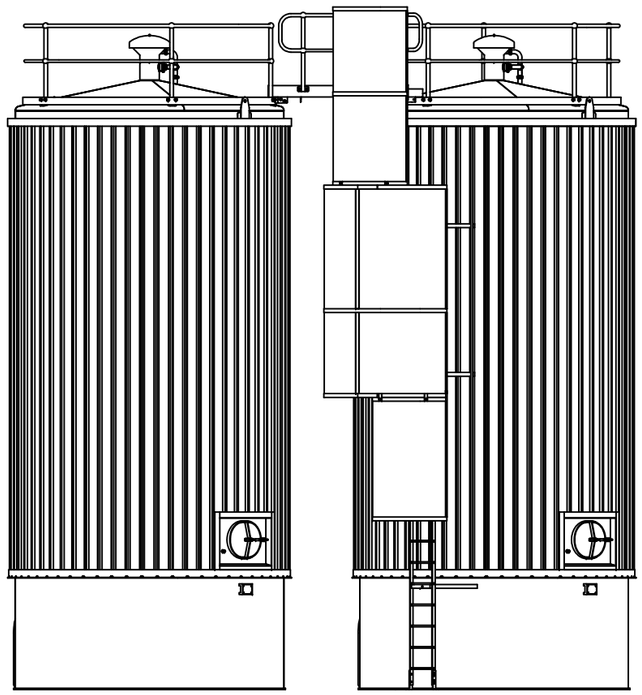

SIDE VIEW
SCALE 1:40

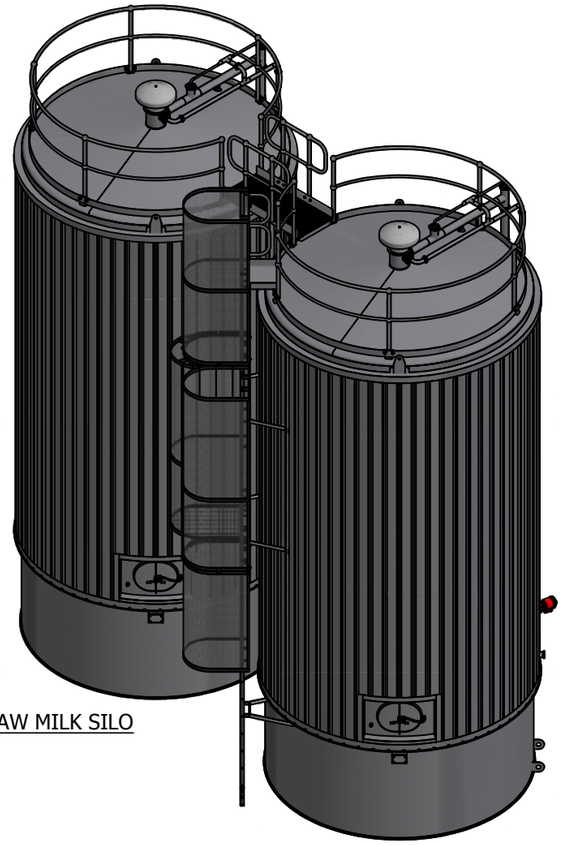

C1610-001 60kL RAW MILK SILO

C1610-002 60kL RAW MILK SILO

APPROVED FOR CONSTRUCTION

FIRST REVISION	INTERNAL CO-ORD.	SALES	DESIGN
A	✓	✓	✓
CURRENT REVISION	CHECKED		
2	✓		

DRG No	TITLE

REFERENCE DRAWINGS

REV	DATE	DESCRIPTION	DRN
2	10-07-15	VISUALLY ADDED AGITATOR ASSEMBLIES	T.C.A.
1	26-06-15	ISSUED FOR CONSTRUCTION	T.C.A.
A	5-06-15	ISSUED FOR APPROVAL	T.C.A.

REVISIONS

THIRD ANGLE PROJECTION WHERE APPLICABLE. DIMENSIONS ARE IN MILLIMETERS. DO NOT SCALE - IF IN DOUBT ASK.

THIS DRAWING IS THE PROPERTY OF J FURPHY & SONS AND IS NOT TO BE COPIED, REPRODUCED OR HANDED TO ANY THIRD PARTY WITHOUT WRITTEN PERMISSION FROM J FURPHY & SONS

EST. 1866 GOOD, BETTER, BEST...™
FURPHY ENGINEERING
SHEPPARTON, VICTORIA, AUSTRALIA
WWW.FURPHYR.COM.AU

CLIENT: BLACK SWAN FOODS

TITLE: 2 x 60kL RAW MILK SILOS
ITEM No.: C1610-001 & 0022
GENERAL LAYOUT

DRAWN	SCALE	SIZE
T.C.A.	NOTED	A1
DATE	CONTRACT No	
5/06/2015	C1610	
DRG No.		REV
FP-7106-1		2

NOZZLE SCHEDULE

NOZZLE	SIZE	SCH	FITTING	SERVICE
N1	-	-	250DIA STD OTA VENT	VENT
N2	50.8	1.6	RAW TUBE	SILO CIP
N3	-	-	BRANCHED FROM NOZZLE N2	OVERFLOW CIP
N4	50.8	-	TRICLOVER FERRULE	HIGH LEVEL
N5	101.6	1.6	RAW TUBE	OVERFLOW
N6	-	-	SUDMO A29 MANWAY	MANWAY
N7	-	-	CPE DIARYPRO 70 AGITATOR	AIGITATOR
N8	-	-	GEORDIE HYGENIC SAMPLE VALVE	SAMPLE VALVE
N9	76.2	1.6	BSM CIP MALE PART	OUTLET
N10	50.8	-	TRICLOVER FERRULE	LEVEL TRANSMITTER
N11	50.8	-	TRICLOVER FERRULE	TEMPERATURE
N12	76.2	1.6	BSM CIP MALE PART	INLET

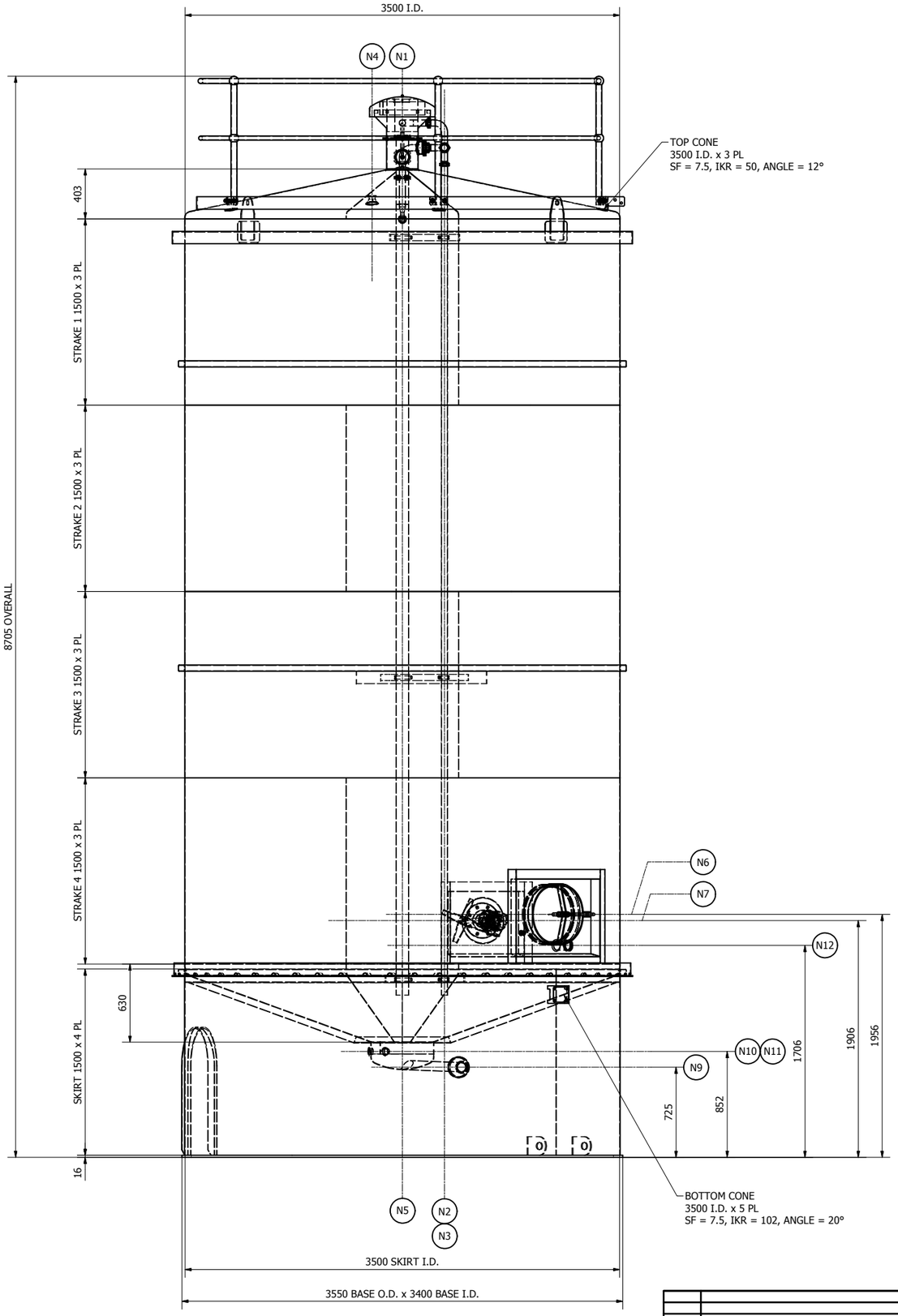

SIDE ELEVATION - GENERAL ARRANGEMENT
SCALE 1:20

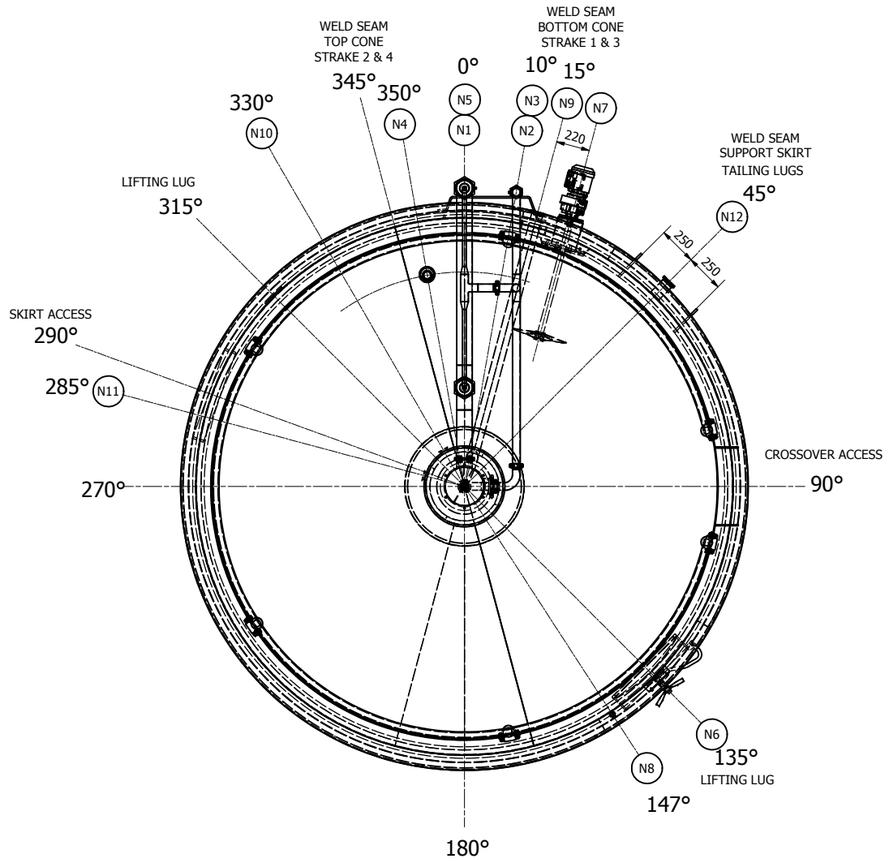

PLAN VIEW - GENERAL ARRANGEMENT
SCALE 1:20

APPROVED FOR CONSTRUCTION

FIRST REVISION	INTERNAL CO-ORD.	SALES	DESIGN
A	✓	✓	✓
CURRENT REVISION	CHECKED		
2	✓		

DRG No	TITLE

REFERENCE DRAWINGS

REV	DATE	DESCRIPTION	DRN
2	10-07-15	VISUALLY ADDED AGITATOR ASSEMBLY	T.C.A.
1	26-06-15	ISSUED FOR CONSTRUCTION	T.C.A.
A	26-05-15	ISSUED FOR APPROVAL	T.C.A.

REVISIONS

THIRD ANGLE PROJECTION WHERE APPLICABLE. DIMENSIONS ARE IN MILLIMETERS. DO NOT SCALE - IF IN DOUBT ASK.

THIS DRAWING IS THE PROPERTY OF J FURPHY & SONS AND IS NOT TO BE COPIED, REPRODUCED OR HANDED TO ANY THIRD PARTY WITHOUT WRITTEN PERMISSION FROM J FURPHY & SONS

EST. 1864
GOOD, BETTER, BEST...™
FURPHY ENGINEERING
SHEPPARTON, VICTORIA, AUSTRALIA
WWW.FURPHYE.COM.AU

CLIENT: BLACK SWAN FOODS

TITLE: 1 x 60kL RAW MILK SILO
ITEM No. C1610-001
GENERAL ARRANGEMENT

DRAWN	SCALE	SIZE
T.C.A.	NOTED	A1
DATE	CONTRACT No	
26/05/2015	C1610	
DRG No.		REV
FP-7106-2		2

NOZZLE SCHEDULE

NOZZLE	SIZE	SCH	FITTING	SERVICE
N1	-	-	250DIA STD OTA VENT	VENT
N2	50.8	1.6	RAW TUBE	SILO CIP
N3	-	-	BRANCHED FROM NOZZLE N2	OVERFLOW CIP
N4	50.8	-	TRICLOVER FERRULE	HIGH LEVEL
N5	101.6	1.6	RAW TUBE	OVERFLOW
N6	-	-	SUDMO A29 MANWAY	MANWAY
N7	-	-	CPE DAIRYPRO 70 AGITATOR	AIGITATOR
N8	-	-	GEORDIE HYGENIC SAMPLE VALVE	SAMPLE VALVE
N9	76.2	1.6	BSM CIP MALE PART	OUTLET
N10	50.8	-	TRICLOVER FERRULE	LEVEL TRANSMITTER
N11	50.8	-	TRICLOVER FERRULE	TEMPERATURE
N12	76.2	1.6	BSM CIP MALE PART	INLET

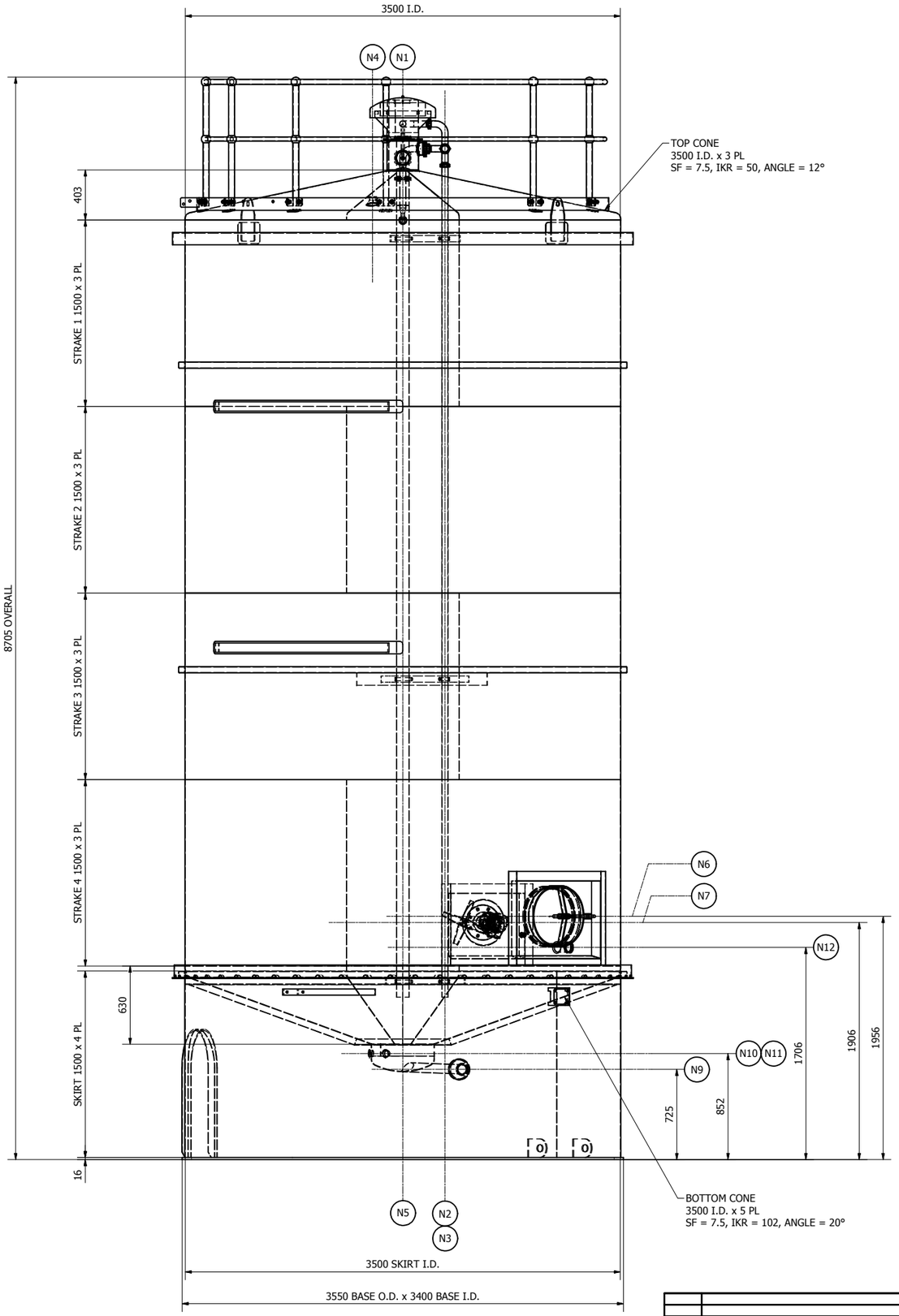

SIDE ELEVATION - GENERAL ARRANGEMENT
SCALE 1:20

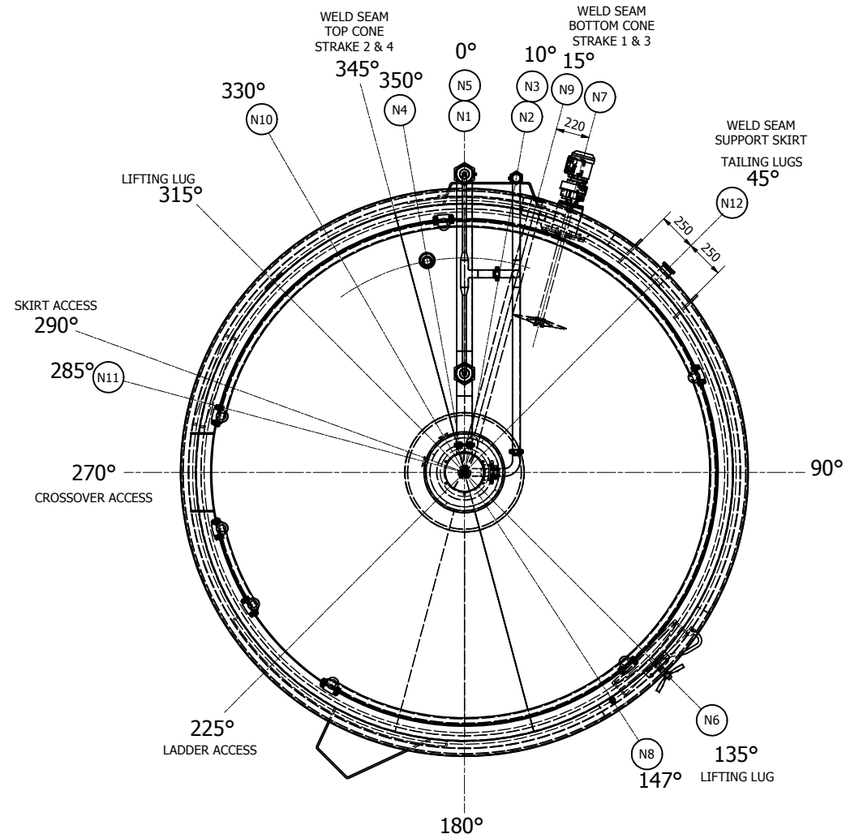

PLAN VIEW - GENERAL ARRANGEMENT
SCALE 1:20

APPROVED FOR CONSTRUCTION

FIRST REVISION	INTERNAL CO-ORD.	SALES	DESIGN
A	✓	✓	✓
CURRENT REVISION	CHECKED		
2	✓		

DRG No	TITLE	REV	DATE	DESCRIPTION	DRN
		2	10-07-15	VISUALLY INCLUDE AGITATOR ASSEMBLY	T.C.A.
		1	26-06-15	ISSUED FOR CONSTRUCTION	T.C.A.
		A	26-05-15	ISSUED FOR APPROVAL	T.C.A.

REFERENCE DRAWINGS — REVISIONS

THIRD ANGLE PROJECTION WHERE APPLICABLE. DIMENSIONS ARE IN MILLIMETERS. DO NOT SCALE - IF IN DOUBT ASK.

THIS DRAWING IS THE PROPERTY OF J FURPHY & SONS AND IS NOT TO BE COPIED, REPRODUCED OR HANDED TO ANY THIRD PARTY WITHOUT WRITTEN PERMISSION FROM J FURPHY & SONS

EST. 1866 GOOD, BETTER, BEST...™ FURPHY ENGINEERING SHEPPARTON, VICTORIA, AUSTRALIA WWW.FURPHYS.COM.AU

CLIENT: BLACK SWAN FOODS

TITLE: 1 x 60kL RAW MILK SILO
ITEM No. C1610-002
GENERAL ARRANGEMENT

DRAWN	SCALE	SIZE
T.C.A.	NOTED	A1
DATE 26/05/2015	CONTRACT No C1610	
DRG No. FP-7106-3	REV 2	